Subminiature Switch SW44034

Features

- < 3/4” behind panel depth
- SPST, NO, momentary w/click
- 1/2” diameter mounting hole
- non-illuminated

Electro-Mech Series SW44034 is a subminiature momentary snap feel non-illuminated pushbutton switch. Compact and rugged for dense packaging situations. Water-resistant construction includes o-ring seal around the plunger and epoxy bead seal around base and terminals.

Specifications:

Ratings:	30vdc or 125vac, 1a resistive, 0.5a inductive
Contact Resistance:	0.025 ohm initially 0.100 ohm max after life
Dielectric Strength:	1000 VRMS
Insulation Resistance:	1000 megaohm at 500vdc
Life (at rated load):	100,000 cycles minimum at rated load
Weight:	3 grams (approx.)
Operating Pressure:	32 oz. ± 8 oz.
Plunger Travel:	0.080” (nom.)
Hardware Supplied:	hex nut (1/2”-32) and lockwasher
Terminals:	solder lug terminals
Pushbutton Lenses:	None available. EMC never tooled a custom lens insert.
Lamps:	none (non-illuminated)
Ordering info:	order as drawing SW44034,L4xxxC

Specifications (not to scale) (Drawing SW44034):

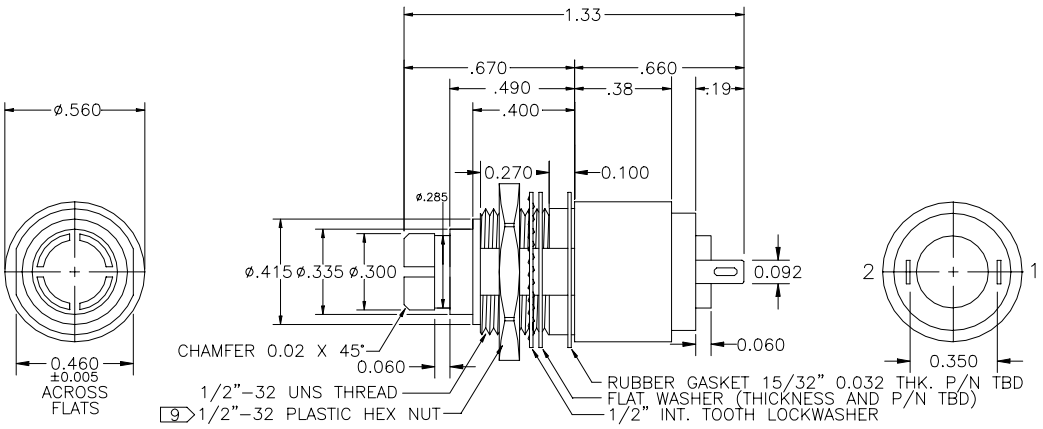

Electro-Mech Components, Inc. ◆ 888/442-7180 ◆ 626/442-7180 ◆ Fax 626/350-8070
1826 Floradale Avenue ◆ South El Monte, CA 91733-3689 USA ◆ Email Info@electromechcomp.com
web: www.electromechcomp.com

Rev 03/28/2025